WELDING DETAIL OF PART 19

FRONT ELEVATION

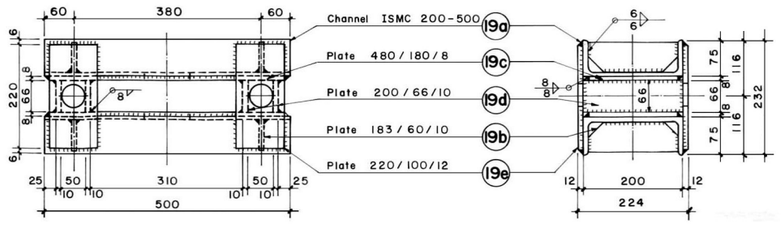

SIDE ELEVATION

PLAN

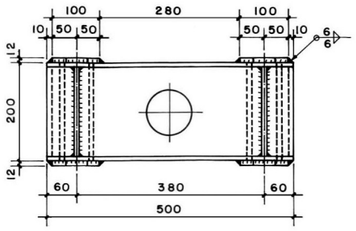

ASSEMBLY AND WELDING DETAIL OF PART 20

TURNBUCKLE : Capacity 3 tons.

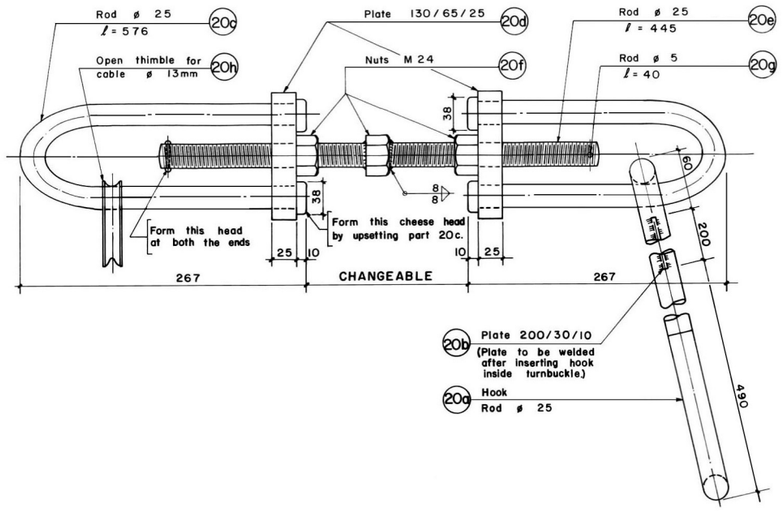

FIXING OF WALKWAY STEEL DECK

SECTION A-A

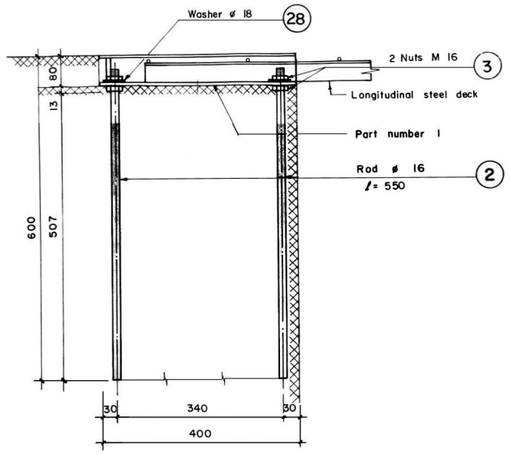

WELDING DETAIL OF PART 9

FRONT ELEVATION

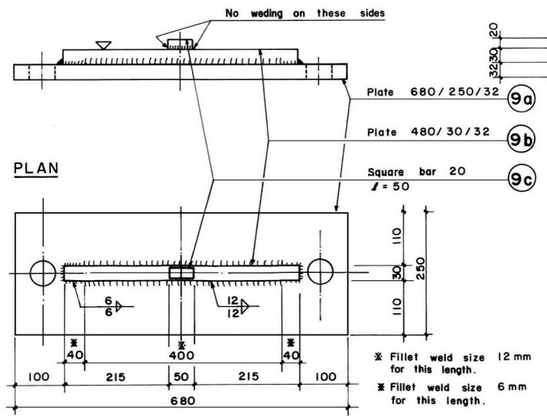

SIDE ELEVATION

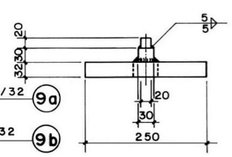

WELDING DETAIL OF PART 26

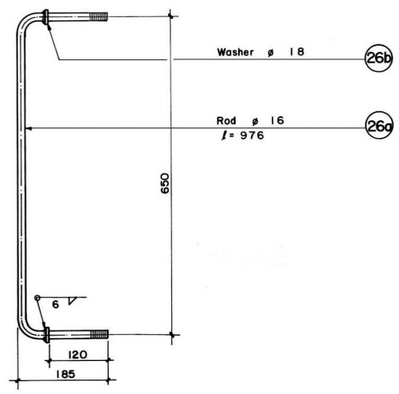

PLAN

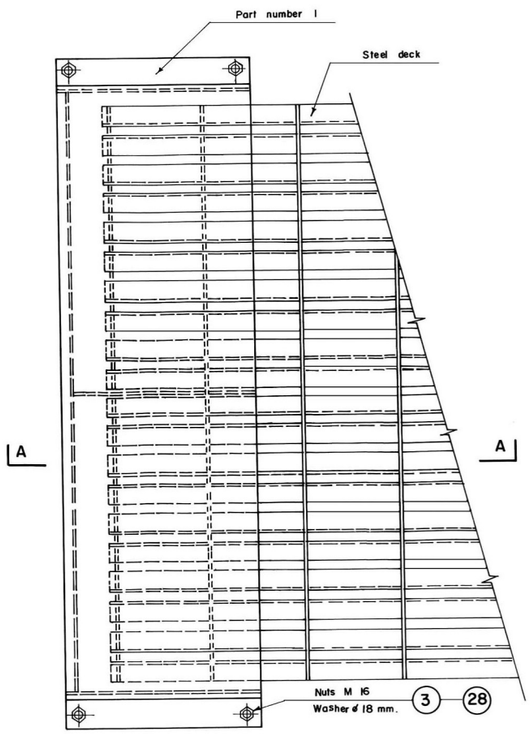

WELDING DETAIL OF PART 12

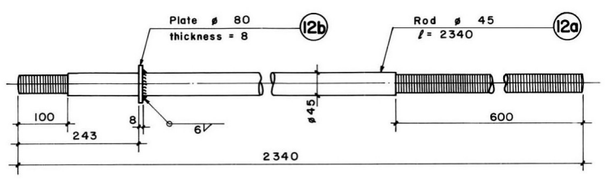

WELDING DETAIL OF PART 6

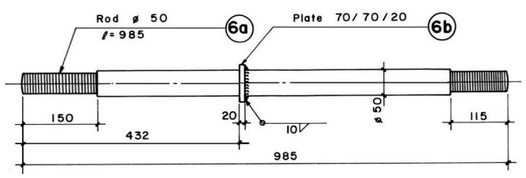

Page 4 of 5 Drawing No. 93