Part no.	Section (mm)	Quantity	Working Drawing (Dimension in mm)	Length Single/pc mm	Length total m	Weight kg/pc	Weight total kg	Surface to be painted m2/pc	Surface to be painted total m2	Total Weight (finished) Galvanized (kg)	Remarks
17	Rod ø 25 ℓ = 105	1	2 holes ø 6	105	0.11	0.39	0.39	Apply grease only		0.40	This pin is fitted to the tower saddle
18	Plate 110/50/16	3	2 holes ø 17 thickness = 16 Shape or mill 2 down Grind off the corners	—	—	0.62	1.86	0.02	0.06	1.90	Plate for cable clamping
19	Hexagonal nut M 20 IS 1363	5	Thread M20	—	—	0.061	0.31	Galvanized			1 pc. extra Ref : IS 1363-1967
20	Washer ø 22 IS 6610	5	thickness = 8	—	—	0.044	0.22	Galvanized			1 pc. extra Ref : IS 6610 – 1972
21	Hexagonal bolt M 12 x 50 IS 1363	126	Thread M12 Thread length more than provided in the standard.	—	—	0.057	7.18	Galvanized			6 pcs. extra Ref : IS 1363-1967
22	Hexagonal nut M 12 IS 1363	252	Thread M12	—	—	0.018	4.54	Galvanized			12 pcs. extra Ref : IS 1363-1967
23	Washer ø 14 IS 6610	252	thickness = 8 mm	—	—	0.019	4.79	Galvanized			12 pcs. extra Ref : IS 6610-1972
24	Hexagonal bolt M 12 x 60 IS 1363	126	Thread length more than provided in the standard. Thread M12	—	—	0.065	8.19	Galvanized			6 pcs. extra Ref : IS 1363-1967
25	Hexagonal bolt M 16 x 80 IS 1363	7	Thread M16	—	—	0.15	1.05	Galvanized			1 pc. extra Ref : IS 1363-1967
26	Hexagonal nut M 16 IS 1363	7	Thread M16	—	—	0.032	0.22	Galvanized			1 pc. extra Ref : IS 1363 – 1967
27	Washer ø 18 IS 6610	7	thickness = 8	—	—	0.028	0.20	Galvanized			1 pc. extra Ref : IS 6610-1972
28	Open thimble	1	Thimble to ISI standard for cable ø 13mm	—	—	0.12	0.12	Galvanized			Ref : IS 2315 - 1978
29	Bulldog grip	12	M.S. forged bulldog grip to ISI standard for cable ø 13mm	—	—	0.28	3.36	Galvanized			Ref : IS 2361 - 1970
			TOTAL (1-29)				350.91 kg		11.63 m²	326.35 kg	

Steelparts to be Galvanized :	318.96 kg	Hot Dip Galvanization : IS 2629, IS 2633	
Steel Parts to be painted :	11.63 m²	Weight of Zinc Coat : 0.61 kg / m²	

DETAIL OF PART 4

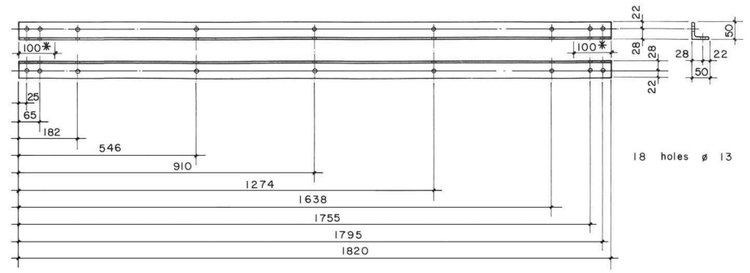

DETAIL OF PART 5

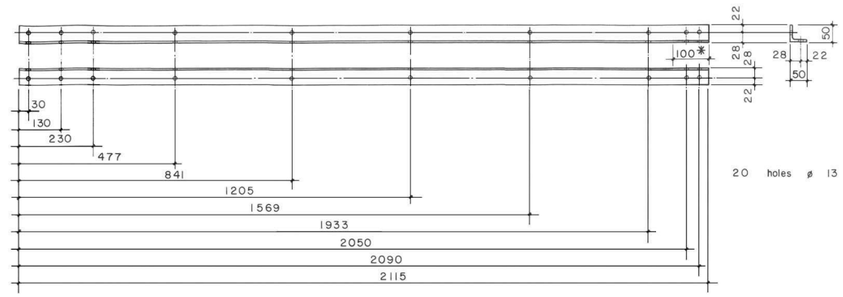

DETAIL OF PART 6

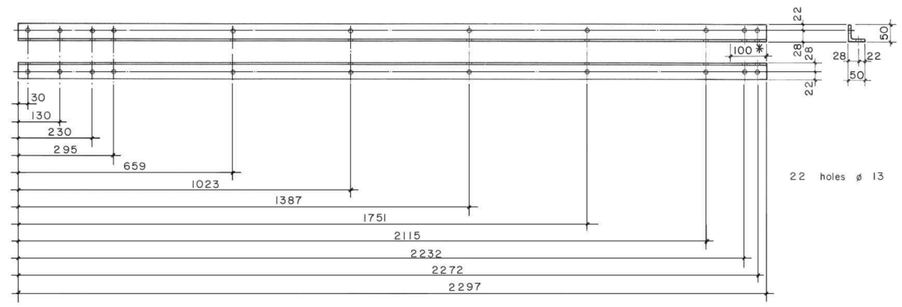

WELDING DETAIL OF PART 1

FRONT ELEVATION

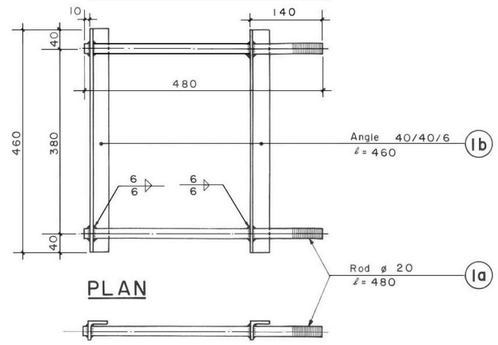

PLAN

Produced by HMG/N, Ministry of Local Development, Department of Local Infrastructure Development and Agricultural Roads with the support of the Swiss Government (SDC Nepal) through helvetas Nepal