Part no.	Section (mm)	Quantity	Working Drawing (Dimension in mm)	Length Single/pc mm	Length total m	Weight kg/pc	Weight total kg	Surface to be painted m²/pc	Surface to be painted total m²	Total weight (finished) Galvanized kg	Remarks
14	Flat 40/8 ℓ = 360	150	2 holes ø 13 thickness = 8	360	54.00	0.87	130.50	0.03	4.50	133.25	Flats used as bracing 2 pcs. extra.
15	Rod ø 36 ℓ = 380	1	2 holes ø 6 Rod ø 36	380	0.38	3.02	3.02	Apply grease only		3.05	This pin is used to connect part nos. 4 and 5.
16	Plate 60/60/6	3	1 hole ø 37 thickness = 6 Grind off the corners	—	—	0.12	0.36	0.01	0.03	0.38	1 pc. extra
17	Split pin ø 5 ℓ = 65	10		—	—	0.02	0.20	Bright steel			2 pcs. extra
18	Rod ø 25 ℓ = 95	2	2 holes ø 6 Rod ø 25	95	0.19	0.35	0.70	Apply grease only		0.71	This pin is used to connect part nos. 6 and 10
19	Washer ø 50 x 6	7	1 hole ø 27 thickness = 6	—	—	0.07	0.49	Galvanized			1 pc. extra
20	Rod ø 25 ℓ = 105	1	2 holes ø 6 Rod ø 25	105	0.11	0.39	0.39	Apply grease only		0.40	This part is fitted to Tower Saddle.
21	Hexagonal bolt M 12 x 50 IS 1363	160	Thread M12 Thread length more than provided in the standard.	—	—	0.057	9.12	Galvanized			8 pcs. extra Ref: IS 1363 - 1967
22	Hexagonal nut M 12 IS 1363	305	Thread M12	—	—	0.018	5.49	Galvanized			9 pcs. extra Ref: IS 1363 - 1967
23	Washer ø 14 IS 6610	305	thickness = 3	—	—	0.019	5.80	Galvanized			9 pcs. extra Ref: IS 6610 - 1972
24	Hexagonal bolt M 12 x 60 IS 1363	150	Thread M12 Thread length more than provided in the standard.	—	—	0.065	9.75	Galvanized			6 pcs. extra Ref: IS 1363 - 1967
25	Hexagonal bolt M 16 x 80 IS 1363	7	Thread M16	—	—	0.15	1.05	Galvanized			1 pc. extra Ref: IS 1363 - 1967
26	Hexagonal nut M 16 IS 1363	7	Thread M16	—	—	0.032	0.22	Galvanized			2 pcs. extra Ref: IS 1363 - 1967
27	Washer ø 18 IS 6610	7	thickness = 3	—	—	0.028	0.20	Galvanized			2 pcs. extra Ref: IS 6610 - 1972
28	Open thimble	1	Thimble to ISI standard for cable ø 13 mm	—	—	0.12	0.12	Galvanized			Ref: IS 2315 - 1978
29	Bulldog grip	12	M. S. forged bulldog grip to ISI standard for cable ø 13mm	—	—	0.28	3.36	Galvanized			Ref: IS 2361 - 1970
			TOTAL (1-29)			460.70 kg		14.83 m²		432.52 kg	

Steel parts to be Galvanized :	413.23 kg	Hot Dip Galvanization : IS 2629 , IS 2633
Steel Parts to be painted :	14.83 m²	Weight of Zinc Coat : 0.61 kg / m²

WELDING DETAIL OF PART I

FRONT ELEVATION

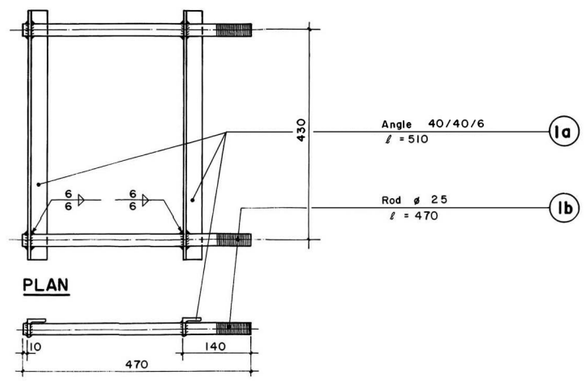

DETAIL OF PART 7

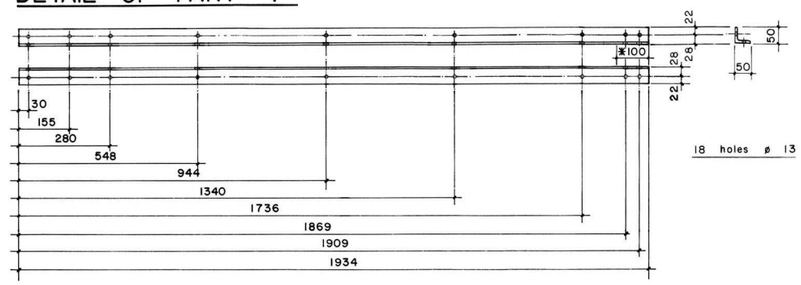

DETAIL OF PART 8

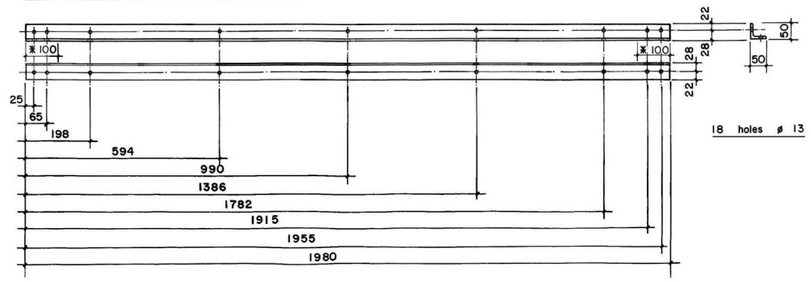

DETAIL OF PART 9

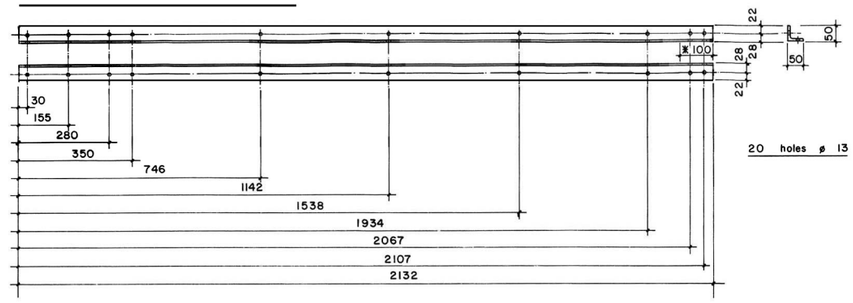

WELDING DETAIL OF PART II

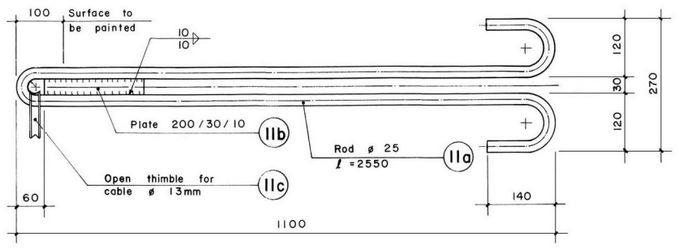

Produced by HMG/N, Ministry of Local Development, Department of Local Infrastructure Development and Agricultural Roads with the support of the Swiss Government (SDC Nepal) through helvetas Nepal