Part no.	Section (mm)	Quantity	Working Drawing (Dimension in mm)	Length Single/pc mm	Length total m	Weight kg/pc	Weight total kg	Surface to be painted m²/pc	Surface to be painted total m²	Total weight (finished) Galvanized kg	Remarks
9	Flat 100/10 ℓ = 1700	16	8 holes ø 17 , thickness = 10	1700	27.20	13.20	211.20	—	—	—	
10	Flat 40/6 ℓ = 974	1	hole to mark the centerline; 3 holes ø 14 thickness = 6	974	0.97	1.82	1.82	—	—	—	Bend sharply both ends of part nos. 10 and 11 as shown.
11	Flat 40/6 ℓ = 480	1	hole to mark the centerline; 3 holes ø 14 thickness = 6	480	0.48	0.89	0.89	—	—	—	
12	Angle 50/50/6 ℓ = 545	2	5 holes ø 14 As shown – 1 no. Opposite hand – 1 no.	545	1.09	2.42	4.84	—	—	—	
13	Angle 50/50/6 ℓ = 730	2	5 holes ø 14	730	1.46	3.25	6.50	—	—	—	
14	Hexagonal nut M 45	13	This part is identical to part no. 1f	—	—	0.77	10.01	—	—	—	1 pc. extra.
15	Hexagonal bolt M 12 x 40 IS 1363	67	Thread M12	—	—	0.049	3.28	Galvanized			3 pcs. extra. Ref: IS 1363-1967
16	Hexagonal bolt M 16 x 60 IS 1363	100	Thread M16	—	—	0.12	12.00	Galvanized			4 pcs. extra. Ref: IS 1363-1967
17	Hexagonal nut M 12 IS 1363	67	Thread M12	—	—	0.018	1.21	Galvanized			3 pcs. extra. Ref: IS 1363-1967
18	Hexagonal nut M 16 IS 1363	100	Thread M16	—	—	0.032	3.20	Galvanized			4 pcs. extra. Ref: IS 1363-1967
19	Plain washer ø 17 thickness = 4	100		—	—	0.015	1.50	Galvanized			4 pcs. extra.
20	Rod ø 45 ℓ = 2650	1	Rod to be bent to form the hook; R = 15 (inside); R = 50; Surface to be painted.	2650	2.65	10.20	10.20	0.04 (partly painted)	0.04	10.33	Used for fixing Tirfor Machine during erection
	TOTAL (1-20) =						693.49 kg	5.64 m²		30 5.73 kg	

ONLY WHEN REQUIRED

Part no.	Section (mm)	Quantity	Working Drawing (Dimension in mm)	Length Single/pc mm	Length total m	Weight kg/pc	Weight total kg	Surface to be painted m²/pc	Surface to be painted total m²	Total weight (finished) Galvanized kg	Remarks
21	Rod ø 25 ℓ =		Extra length for hook = 250 Weight = 3.58 kg/m'					—	—	—	Ribbed torsteel cold bending required.
22	Plate 240/220/16		Plate bolted to part 3a when Cable end is Socketed; 1 hole ø 43 , 4 holes ø 17; When this plate is used for socketed cable end , part no. 4 and 5 are not necessary.	—	—	6.34		0.12			Weight (finished) Galvanized (0.61 kg/m² x Surface Area + Wt. of steel) kg
23	Hexagonal bolt M 16 x 60 IS 1363		This part is identical to part no. 16	—	—	0.12		Galvanized			Ref: IS 1363-1967
24	Plain washer ø 17 thickness = 4		This part is identical to part no. 19	—	—	0.015		Galvanized			
25	Hexagonal nut M 16 IS 1363		This part is identical to part no. 18	—	—	0.032		Galvanized			Ref: IS 1363-1967
26	Taper washer ø 18 IS 5372		Taper washer nominal hole size ø 18 as per ISI	—	—	0.035		Galvanized			Ref: IS 5372-1975
27	Flat 100/10 ℓ = 835		8 holes ø 17 thickness = 10	835		6.41		—	—	—	Used for extending the length of part no. 9
28	Mortar container Sheet t = 0.5		r = 125; Total about 250 holes ø 4	1400		0.21		—	—	—	Two units per anchor bar (21)
	TOTAL (21-28) =						kg		m²	kg	

Part no.	Section (mm)	Quantity	Working Drawing (Dimension in mm)	Length Single/pc mm	Length total m	Weight kg/pc	Weight total kg	Surface to be painted m²/pc	Surface to be painted total m²	Total weight (finished) Galvanized kg	Remarks
29	Open thimble	1	Thimble to ISI standard for cable ø ____ mm	—	—	*		Galvanized			Ref: IS 2315 – 1967
30	Bulldog grip	*	M.S. forged bulldog grip to ISI standard for cable ø ____ mm	—	—	*		Galvanized			Ref: IS 2361 – 1970
	GRAND TOTAL						kg		m²	kg	

Steel parts to be Galvanized :	302.08 kg	Hot Dip Galvanization : IS 2629 , IS 2633	
Steel parts to be painted :	5.64 m²	Weight of Zinc Coat : 0.61 kg / m²	

* Cable ø mm	Bulldog grips for one cable	Weight (kg/pc) Thimble	Weight (kg/pc) B. grip
36	7	2.75	1.85
40	8	3.20	2.40

WELDING DETAIL OF PART 1

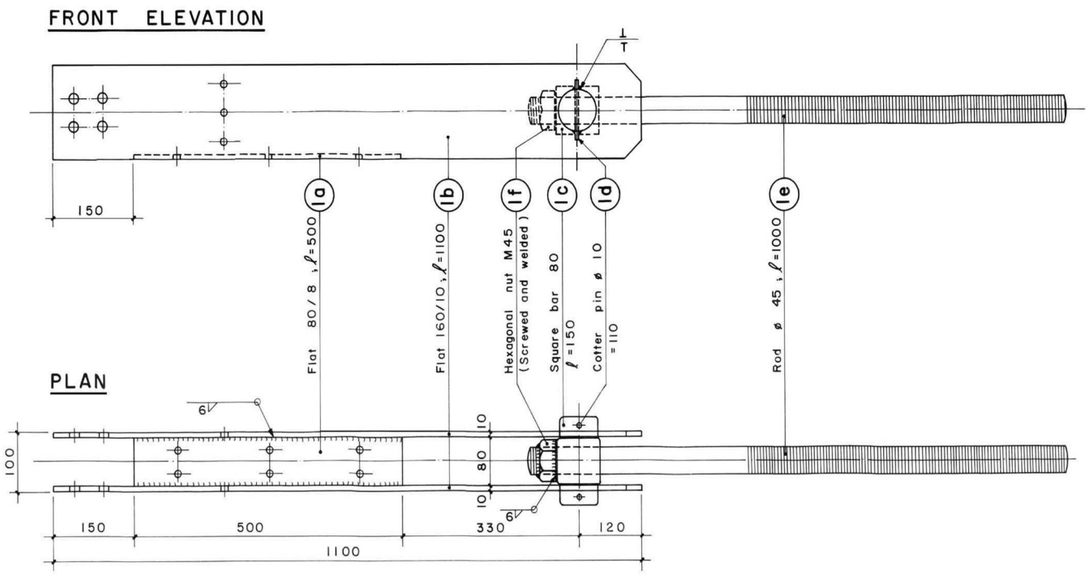

WELDING DETAIL OF PART 3

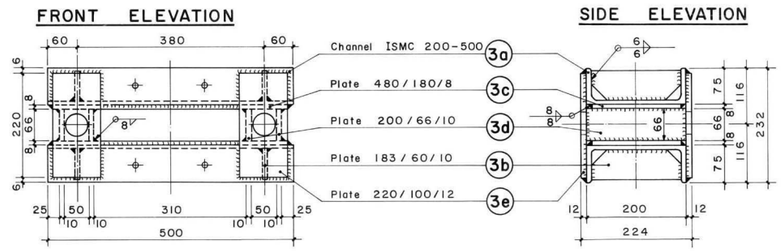

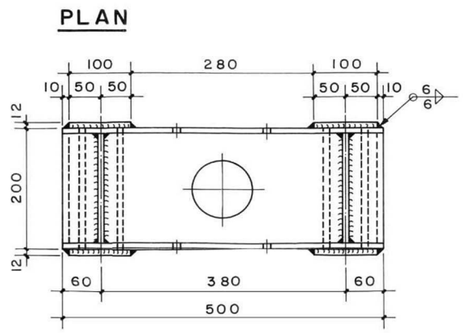

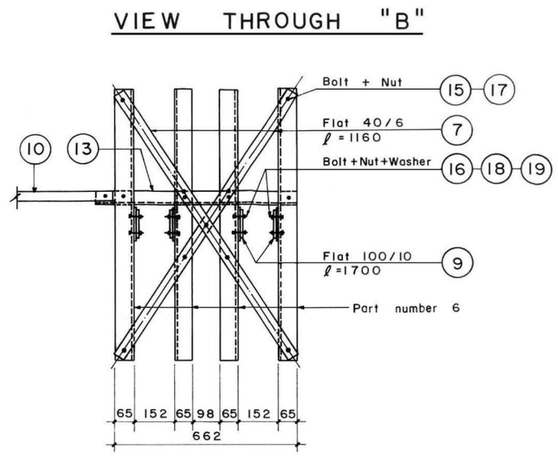

Produced by HMG/N, Ministry of Local Development, Department of Local Infrastructure Development and Agricultural Roads with the support of the Swiss Government (SDC Nepal) through helvetas Nepal